BLUE DEAL:
the route to Blue Energy deployment in the Mediterranean area

Secondary School Ambroz Haračić
Mali Lošinj (Croatia)

Photovoltaic Self-Cleaner PVSC-22

Students: Jan Žugić, Luka Dudić, Marijan Matković
Professor/mentor: Damir Preksavec, dipl.ing.

18th May 2022 - Ravenna (Italy)

Our project: Photovoltaic Self-Cleaner / PVSC-22

PVSC-22 is a self sustaining, miniature solar power plant. Capable of storing energy, acquiring energy from the sun and outputting excess stored energy.
PVSC-22 is a practical application of mechanical, electrical and software engineering.

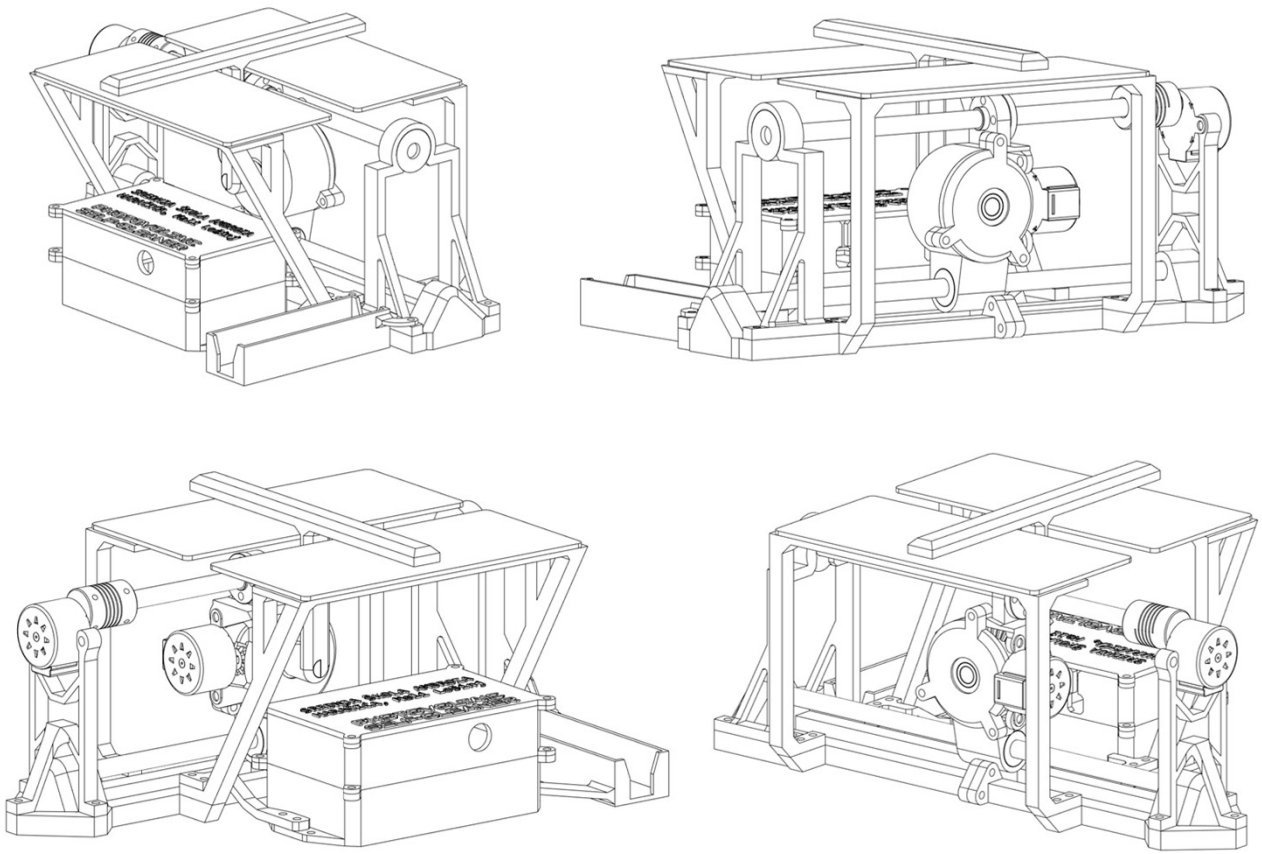

Why clean solar panels?

Recent university research has shown that a dirty solar panel can lose 50% of it's efficiency compared to a clean solar panel.

By automating the cleaning process that problem can be solved, without the hassle of actually doing anything.

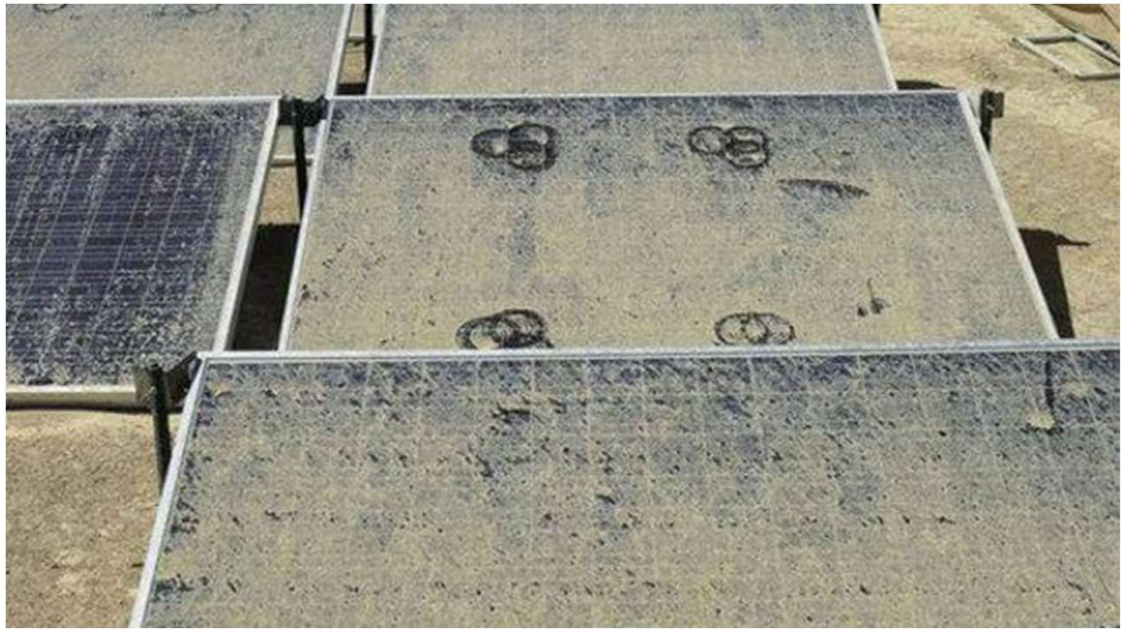

Mechanics

Two stepper motors maneuver the cleaning element across two solar panels.

The electronics are housed in an electronics box that is fixed to a two-component platform via bolts and nuts.

The machine contains 16 3D printed parts and 17 finished parts (not counting screws), which makes the machine about 48% 3D printed.

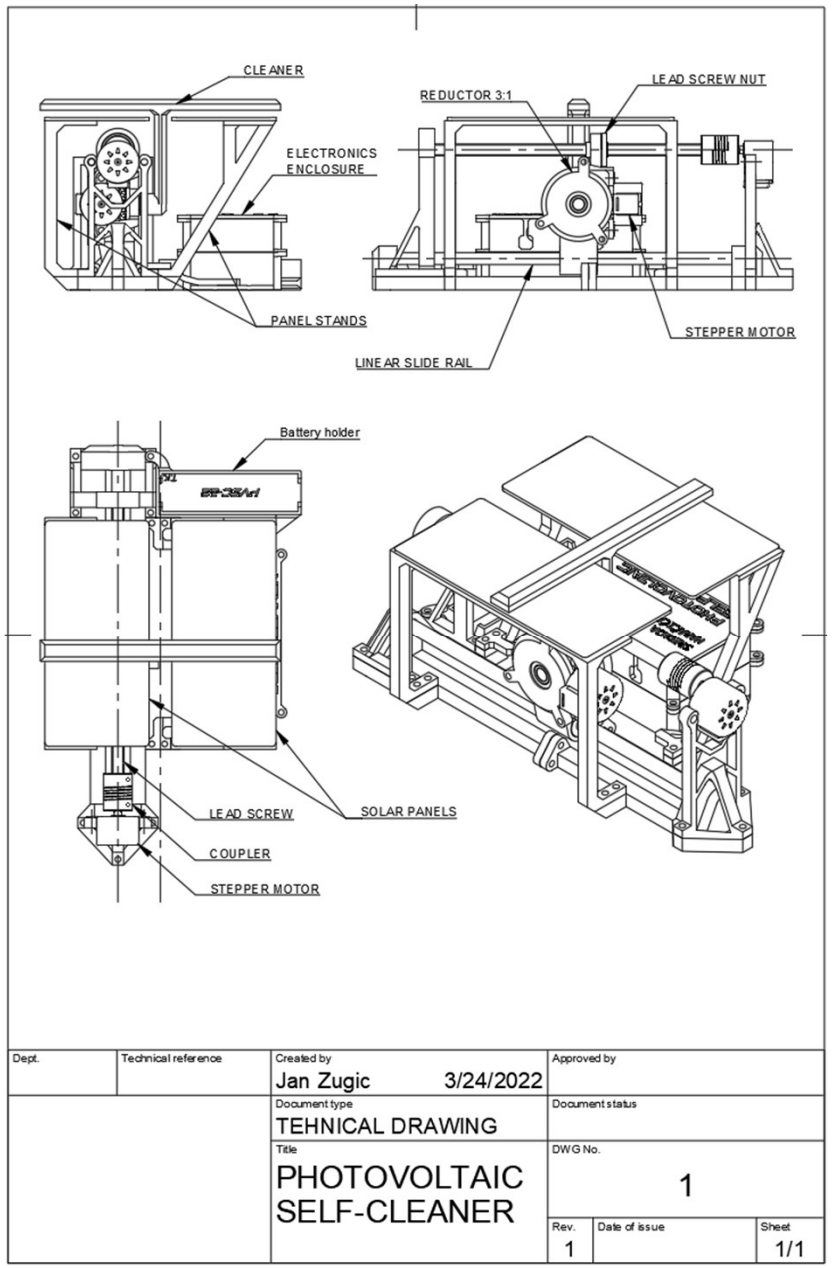

Electronics

Two solar panels power the TP4056 charger which charges the batteries while powering the ESP32 and stepper motors.

stepper motors need voltage boosters because the supplied battery voltage is too low.

Boosters raise the voltage from 4.1 to 5 volts which is required for stepper motors to function.

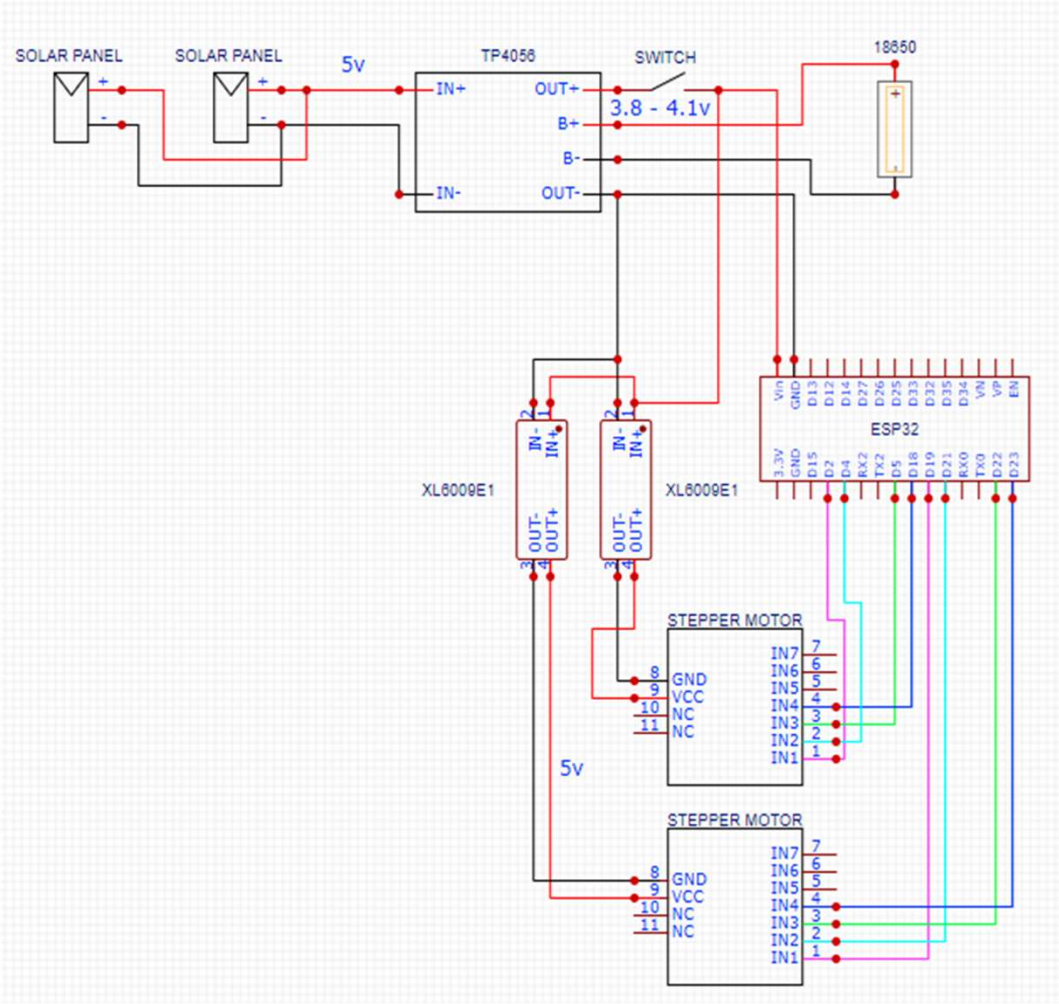

Programming

ESP32 is a microcontroller which can be programmed to do an abundance of tasks.

The stepper motors are controlled by code sent to the ESP32.

The ESP32 uses an Arduino IDE through which different microcontrollers can also be programmed.

```
/*
  Rui Santos
  Complete project details at https://RandomNerdTutorials.com/esp32-stepper-motor-28byj-48-uln2003/

  Permission is hereby granted, free of charge, to any person obtaining a copy
  of this software and associated documentation files.

  The above copyright notice and this permission notice shall be included in all
  copies or substantial portions of the Software.

  Based on Stepper Motor Control - one revolution by Tom Igoe
*/

#include <Stepper.h>

const int stepsPerRevolution = 2048;  // change this to fit the number of steps per revolution

// ULN2003 Motor Driver Pins
#define IN1 2
#define IN2 4
#define IN3 5
#define IN4 18

#define IN12 19
#define IN22 21
#define IN32 22
#define IN42 23


// initialize the stepper library
Stepper myStepper(stepsPerRevolution, IN1, IN3, IN2, IN4);
Stepper myStepper2(stepsPerRevolution, IN12, IN32, IN22, IN42);

void setup() {
  myStepper.setSpeed(20);
  myStepper2.setSpeed(8);

  // initialize the serial port
  Serial.begin(115200);
}

void loop() {
  Serial.println("counterclockwise");
  myStepper2.step(0.7 * stepsPerRevolution);
  delay(500);

  Serial.println("counterclockwise");
  myStepper.step(18 * -stepsPerRevolution);
  delay(500);

  Serial.println("clockwise");
  myStepper.step(18 * stepsPerRevolution);
  delay(500);

  Serial.println("counterclockwise");
  myStepper2.step(0.7 * -stepsPerRevolution);
  delay(10000);
}
```

ESP32 Microcontroller

ESP32 plays a major role in the machine.

ESP32 is the microcontroller responsible for starting the 28BYJ-48 stepper motor, i.e. the cleaning cycle.

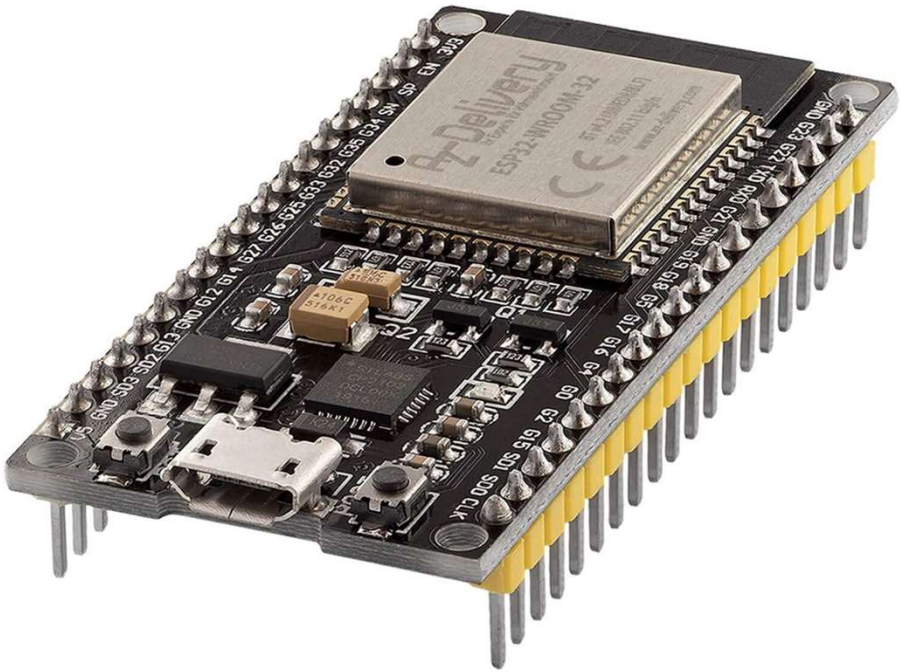

TP4056 Charger

The TP4056 is a complete constant-current/constant-voltage linear charger for single cell lithium-ion batteries.

It charges a single 18650 lithium-ion battery in the machine.

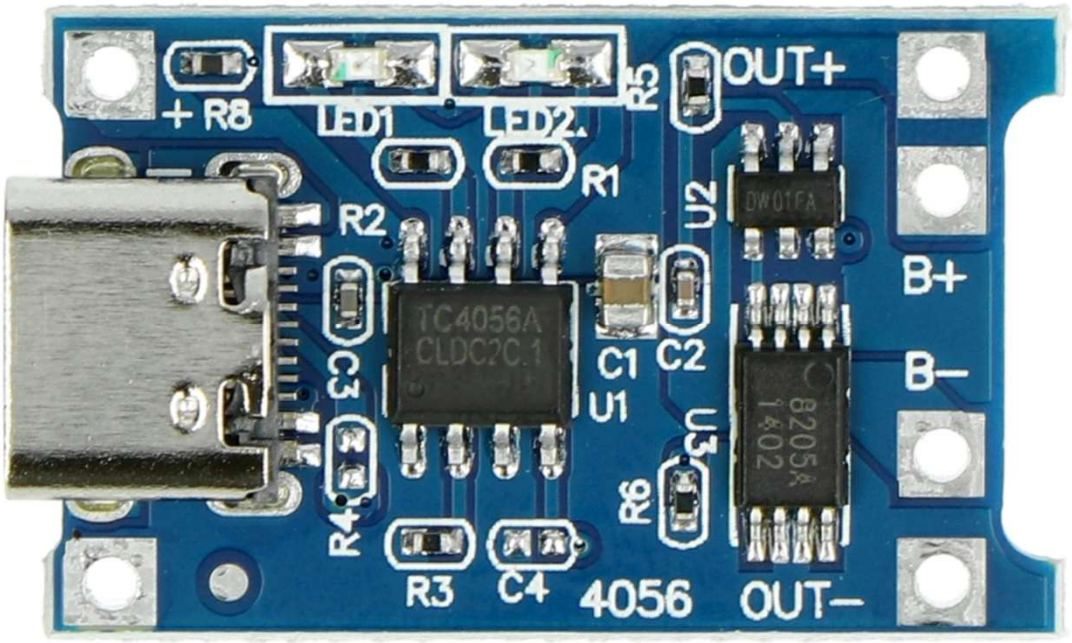

28BYJ-48 Stepper Motor

The 28BYJ-48 four-phase stepper motor has the function of moving the cleaner across the solar panels.

A DC motor cannot control the position of the rotor, that's why a stepper motor is necessary.

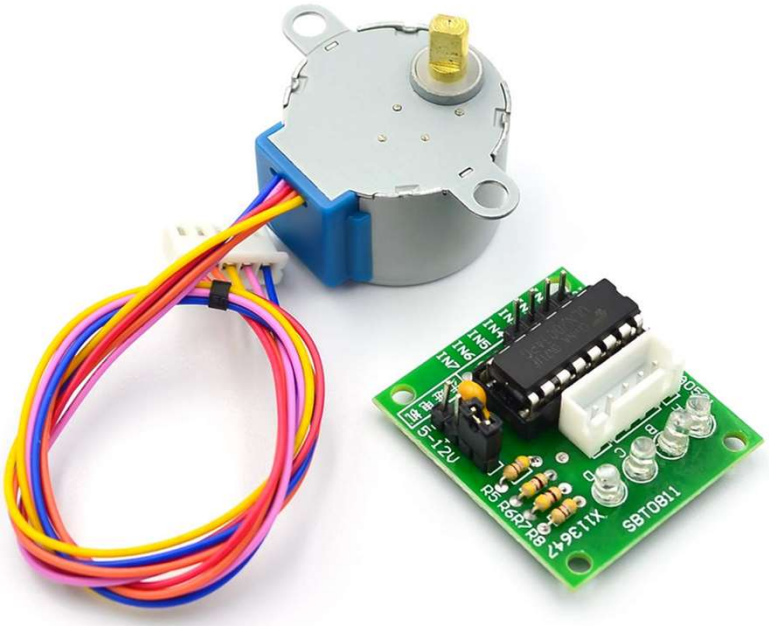

XL6009E1
Voltage Booster

The converter module serves as a voltage amplifier from 4.1v to 5v in order to fulfil the requirements of the two stepper motors.

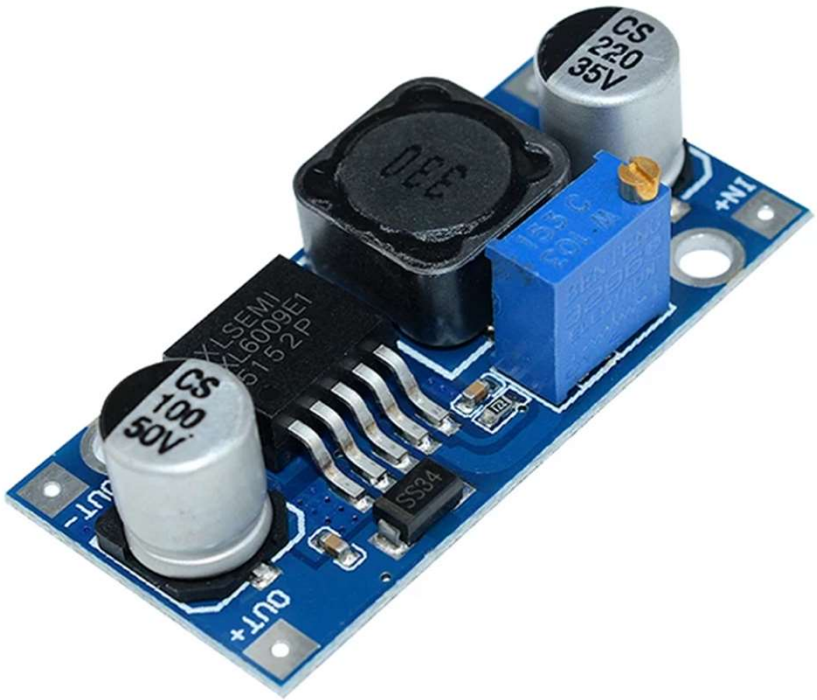

18650 Lithium-Ion Battery

A single 18650 lithium-ion battery powers the entire system. The batteries are charged by a TP4056 charger connected to solar panels.

Switch

A switch is used to turn the PVSC-22 on and off, but it can be switched off and the batteries will still be charging via solar panels.

Solar Panels

Solar panels absorb energy of light and convert it into electricity. Unfortunately they are very low efficiency, only about 20%

The solar panel powers a single 18650 lithium-ion battery via TP4056 charger.

Gear Reducer

A gear reducer is a combination of multiple components, both printed and bought.

A gear reducer is required because the 28BYJ-48 stepper motor itself has insufficient torsional power to hold the cleaner in place.

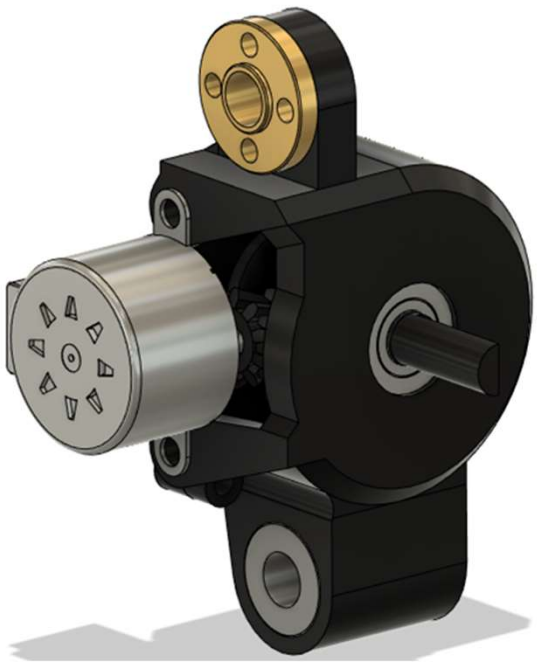

Electronics Enclosure

The electronics enclosure is a set of five 3D printed components that serve to protect the electronics from external conditions and keep them in one place.

Dual-Component Platform

The dual-component platform is the base of the machine, and holds almost all components.

It is printed in two pieces due to the installation of a linear rod and easier replacement in case of damage.

It is held together by nuts and bolts.

Cleaner Movement Mechanism

The cleaner can be moved linearly and also be rotated because of the two 28BYJ-48 stepper motors, one for each axis.

It moves linearly along the panels back and forth, rotating at the end as to not cast a shadow, or at the beginning to make contact with the solar panels.

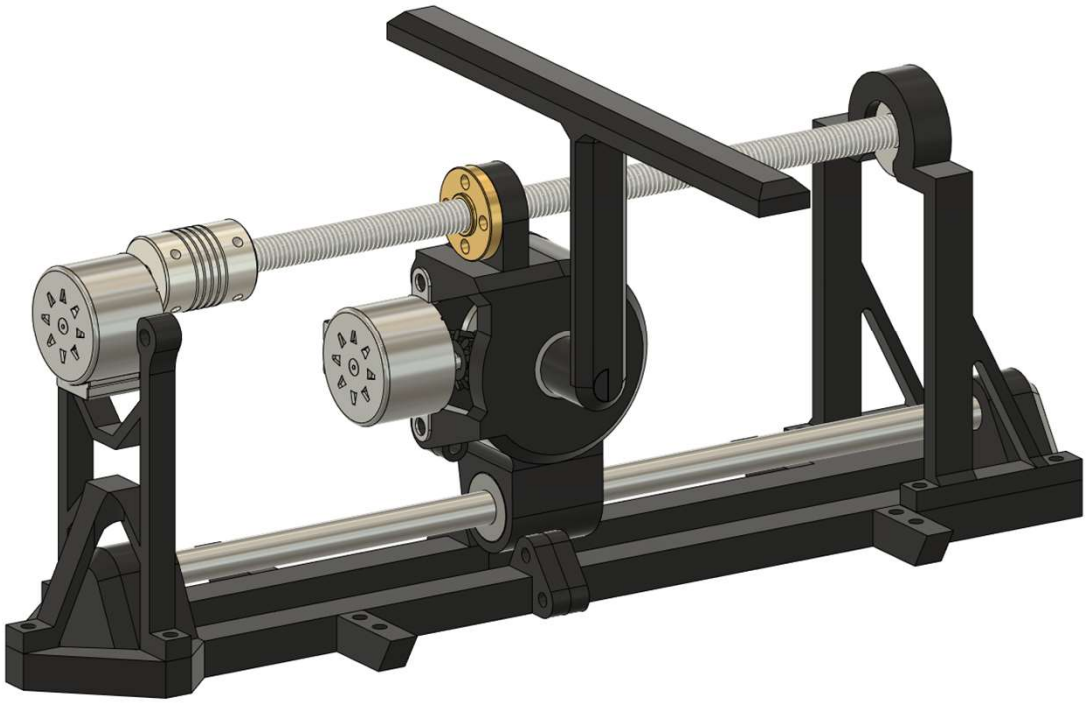

Linear rod and bearing

Using a linear rod and bearing ensures smooth axial movement at an inexpensive price.

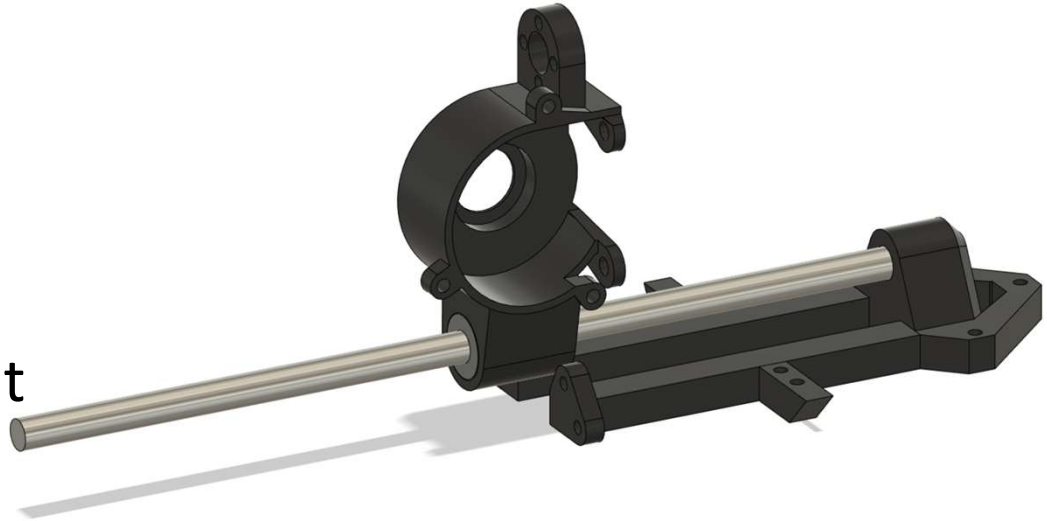

Linear rod is held in place by two circular slots near the ends of the dual-component platform.

Linear bearing is friction held in place by the reductor case.

Lead screw and nut

In order to move the reductor along the solar panels, the PVSC-22 uses a lead screw and a nut connected to a 8BYJ-48 stepper motor via a coupler.

With this system we can easily convert rotational movement from the stepper motor into linear movement.

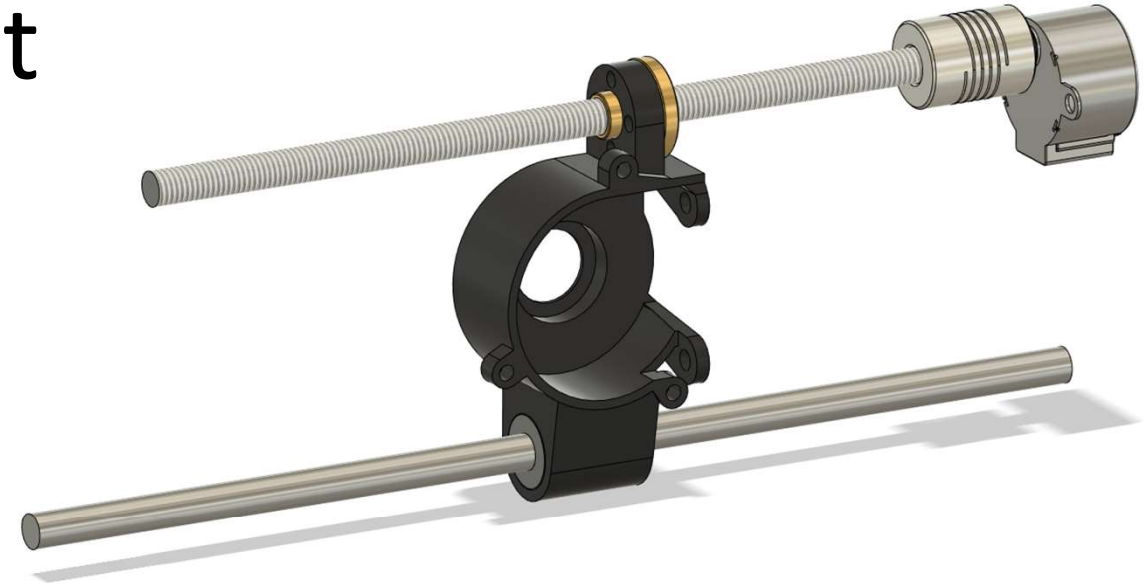

Thank you!

Inspect the model

Meet the engineers:

Damir Preksavec – professor/mentor

Jan Žugić - 3D/2D CAD, electronics, programming, presentation

Luka Dudić - presentation, pictures

Marijan Matković - presentation, pictures

contact us
Damir P. - preksavec.damir@gmail.com
Jan Ž. - szugic2910@gmail.com
Luka D. - luka.dudic1@gmail.com
Marijan M. - marijn.matkovic7@gmail.com